REV	DESCRIPTION\PER REQUEST	DRAWN	DATE

NOTES:

1. UNLESS OTHERWISE SPECIFIED ALL DIMENSIONS ARE IN MM.
2. ALL SPECIFICATIONS ARE SUBJECT TO CHANGE WITHOUT NOTICE AT ANY TIME.

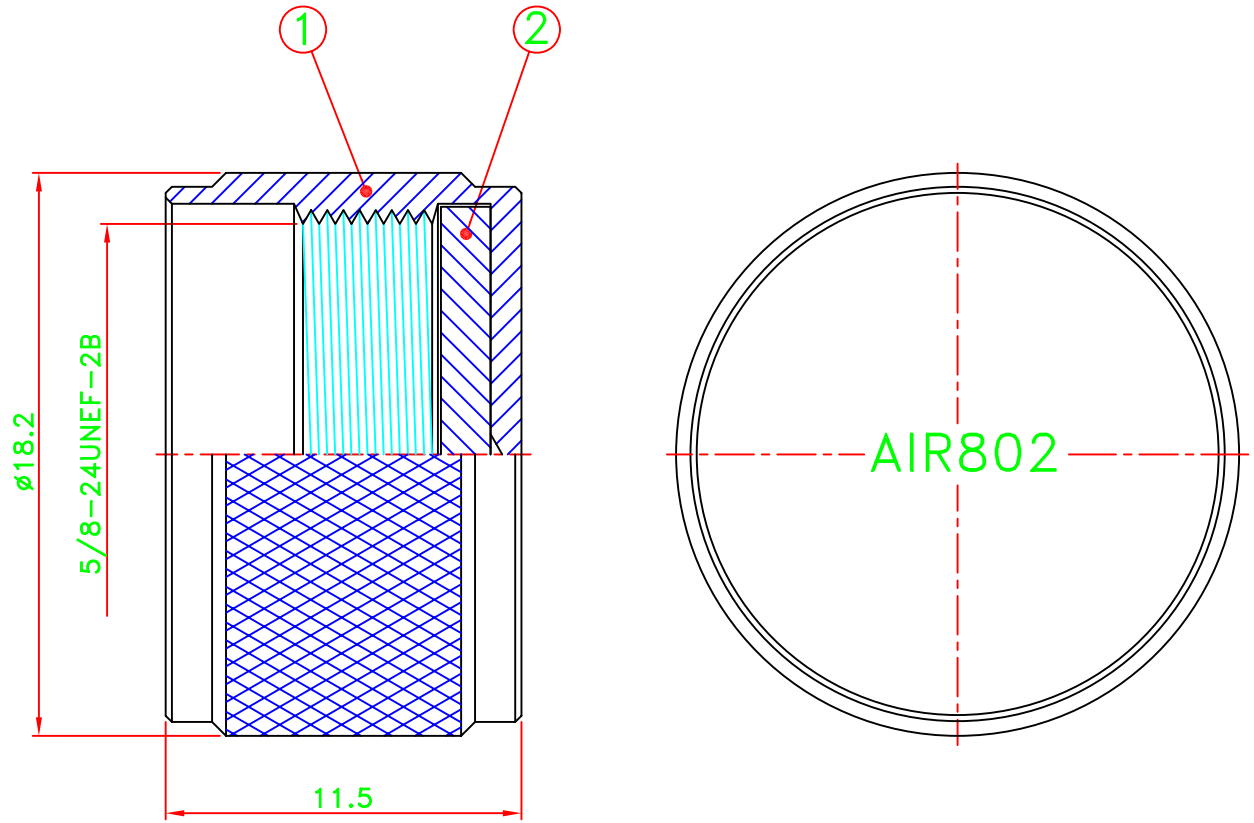

STAMP:AIR802

60K000001-000

NO	Description	Q'ty	Material	Finish
2	Gasket	1	Si-rubber	Red
1	Shell	1	Brass	Nickel

PART NO. CNNMCAP

APPROVED M. BRYANT DATE 04/16/10

CHECKED DATE 04/16/10

DRAWN WEN DATE 04/16/10

* MAJOR DIMENSION

UNLESS OTHERWISE NOTED TOLERANCES
0.5-6=±0.2
6-30=±0.4
30-120=±0.6
120-315=±1.0
ANGLES=±1°

SCALE 4/1 UNIT mm

AIR802 LLC

TITLE N TYPE DUST COVER

DRAWING NO. AS-23111 REV A

FILE NO. W:\[illegible]\AS-23111 DIANA->20100416